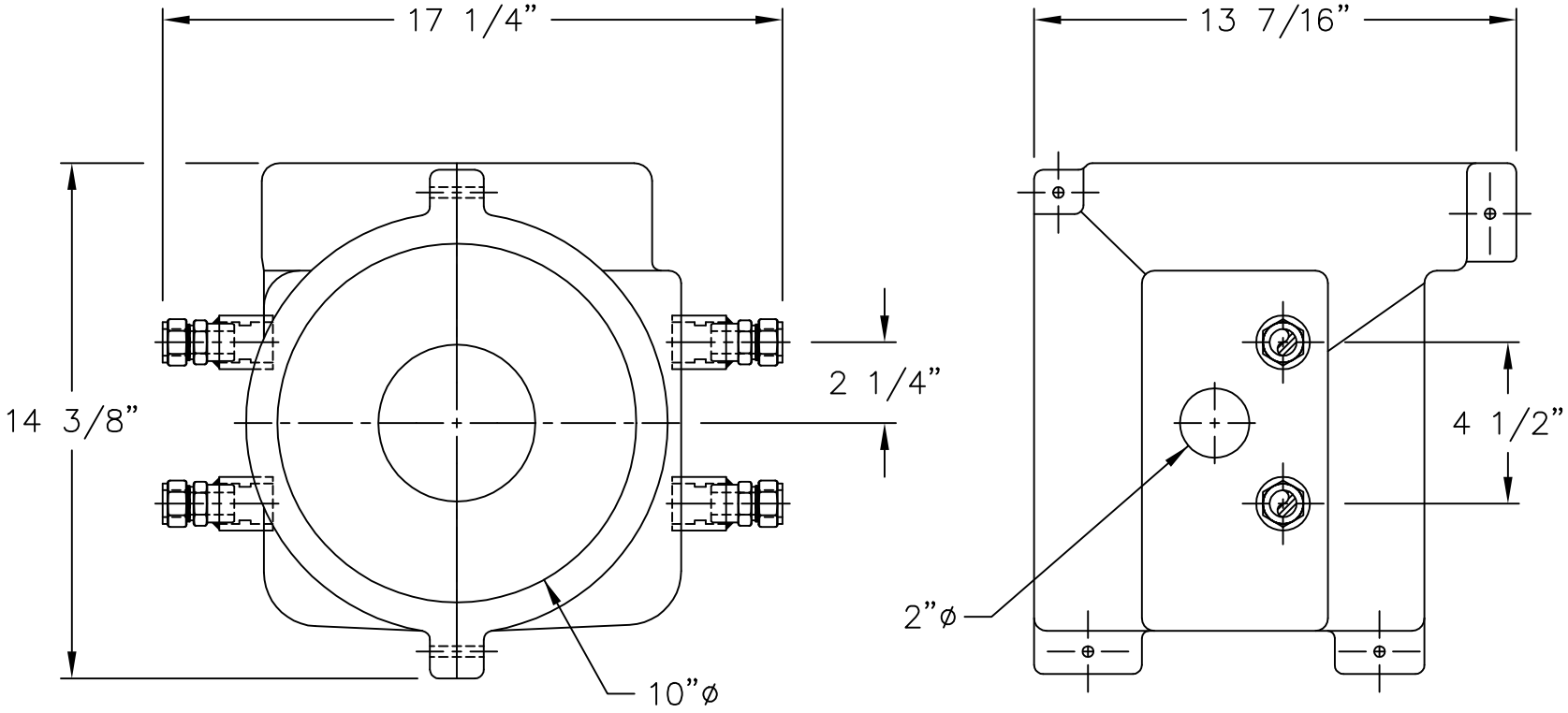

NOTES:

1) CASTING OF COPPER FREE ALUMINUM ALLOY GRADE A356.
2) JACKET HEAT EXCHANGER MADE OF SA 178 GR.A BOILER TUBING.
3) CONTROHEAT JACKET RATED FOR 150 PSIG SERVICE @ 500° F.
4) TOLERANCES FOR CASTING: ±1/4" FOR COUPLINGS LOCATIONS: ±1/4".
5) JACKET CONNECTIONS ARE 3/4"-3000# SA105 S/W COUPLINGS W/ SWAGELOK MALE PIPE WELD ADAPTERS.
6) JACKET CONSISTS OF TWO (2) PIECES.

TAG # : PSV-12103
PSV-12104
SALES # : 3707 JOB # : 9566
CUSTOMER P.O. # : 281988-5
PATTERN # : 201530

FINAL PRINT
By:
Date:

CLIENT	DRW. BY	CHECKED	DATE
	AHH		06/15/98

JACKET FOR A CONSOLIDATED 3"x4"-900#/150# 1914 SAFETY RELIEF VALVE

APP. BY	DATE	SCALE	DRAWING NO.	REV.
.	.	1=5	02-A3667	0