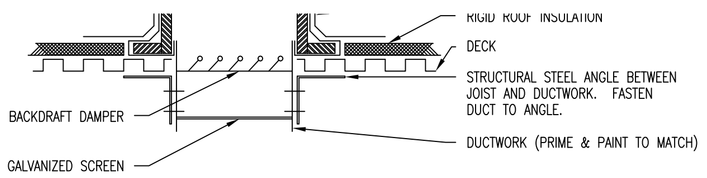

ROOFTOP EXHAUST FAN DETAIL

SCALE: NONE

EF-3	GREENHECK	GB 10-3	EXHAUST	BI	ALUM	5010	1.0"	925	1720	ALWAYS ON	V-BELT	BDD	N/A	1/3	208/1/60	ROOF CURB, DISC. SWITCH, BIRD SCREEN.
EF-4	GREENHECK	GB 14-5	EXHAUST	BI	ALUM	5207	1.0"	1500	1360	ALWAYS ON	V-BELT	BDD	N/A	1/2	208/1/60	ROOF CURB, DISC. SWITCH, BIRD SCREEN
EF-5	GREENHECK	GW-90-G	EXHAUST	BI	ALUM	3701	0.25"	500	1300	T'STAT	DIRECT	BDD	N/A	1/25	120/1/60	BIRD SCREEN, DISC. SWITCH, WALL GRILLE
EF-6	GREENHECK	GW-90-G	EXHAUST	BI	ALUM	3701	0.25"	500	1300	T'STAT	DIRECT	BDD	N/A	1/25	120/1/60	BIRD SCREEN, DISC. SWITCH, WALL GRILLE
EF-7	GREENHECK	GW-90-G	EXHAUST	BI	ALUM	3701	0.25"	500	1300	T'STAT	DIRECT	BDD	N/A	1/25	120/1/60	BIRD SCREEN, DISC. SWITCH, WALL GRILLE

HEAT PUMP SCHEDULE

UNIT DATA					COOLING DATA							HEATING DATA				ELECTRICAL DATA				REMARKS
LABEL	MFR	MODEL	CFM	ESP	EDB/ EWB	TOTAL CLG	SENS CLG	GPM	EWT/ LWT	WPD	THR	EAT	EWT	TOTAL HTG	THA	VOLTAGE	MCA	FLA	HACR BRKR	
HP1	McQUAY	009	300	0.35"	80/67	8.3	6.3	1.8	90/103	4.4'	11.2	70	70	11.9	8.8	208/1/60	4.8	4.0	15 A	VERTICAL UNIT, RA DUCT COLLAR/FILTER RACK
HP2	McQUAY	012	400	0.35"	80/67	11.0	8.7	2.6	90/101	10.1'	14.8	70	70	13.8	10.2	208/1/60	9.1	7.5	15 A	VERTICAL UNIT, RA DUCT COLLAR/FILTER RACK
HP3	McQUAY	015	500	0.35"	80/67	12.7	9.6	2.7	90/102	8.8'	16.7	70	70	16.7	12.6	208/1/60	8.3	6.8	15 A	VERTICAL UNIT, RA DUCT COLLAR/FILTER RACK
HP4	McQUAY	019	630	0.35"	80/67	18.4	13.6	3.8	90/103	13.7'	24.3	70	70	23.1	17.0	208/1/60	13.0	10.6	20 A	VERTICAL UNIT, RA DUCT COLLAR/FILTER RACK
HP5	McQUAY	024	800	0.35"	80/67	23.6	17.6	5.0	90/102	5.9'	30.9	70	70	31.4	23.5	208/1/60	14.9	12.2	25 A	VERTICAL UNIT, RA DUCT COLLAR/FILTER RACK
HP6	McQUAY	030	1000	0.35"	80/67	28.4	21.2	5.7	90/103	7.5'	37.4	70	70	37.7	28.0	208/1/60	20.8	17.0	35 A	VERTICAL UNIT, RA DUCT COLLAR/FILTER RACK
HP7	McQUAY	036	1200	0.35"	80/67	33.9	25.1	7.0	90/103	8.3'	44.5	70	70	44.3	33.2	208/1/60	23.6	19.6	35 A	VERTICAL UNIT, RA DUCT COLLAR/FILTER RACK
HP8	McQUAY	042	1400	0.35"	80/67	40.4	30.1	7.7	90/104	6.4'	53.0	70	70	51.9	38.9	208/1/60	26.8	22.0	45 A	VERTICAL UNIT, RA DUCT COLLAR/FILTER RACK
HP9	McQUAY	048	1600	0.35"	80/67	44.4	33.4	9.0	90/103	10.6'	58.4	70	70	55.0	42.1	208/1/60	38.5	25.2	60 A	VERTICAL UNIT, RA DUCT COLLAR/FILTER RACK
HP10	McQUAY	060	2000	0.35"	80/67	55.2	42.5	12.0	90/102	11.3'	74.5	70	70	75.4	55.9	208/1/60	40.5	27.2	60 A	VERTICAL UNIT, RA DUCT COLLAR/FILTER RACK
HP11	McQUAY	024	800	0.35"	80/67	24.0	17.7	5.0	90/103	5.9'	31.4	70	70	29.6	22.3	208/1/60	15.6	–	35 A	HORIZONTAL UNIT, RA DUCT COLLAR/FILTER RACK
HP12	McQUAY	030	1000	0.35"	80/67	28.8	21.7	6.0	90/103	8.6'	37.8	70	70	38.9	29.1	208/1/60	20.0	–	30 A	HORIZONTAL UNIT, RA DUCT COLLAR/FILTER RACK
HP13	McQUAY	036	1200	0.35"	80/67	35.5	26.3	7.5	90/102	9.2'	46.0	70	70	46.0	35.0	208/1/60	23.4	–	35 A	HORIZONTAL UNIT, RA DUCT COLLAR/FILTER RACK
HP14	McQUAY	042	1400	0.35"	80/67	40.2	29.8	8.0	90/103	7.0'	52.5	70	70	50.7	37.6	208/1/60	27.7	–	45 A	HORIZONTAL UNIT, RA DUCT COLLAR/FILTER RACK
HP15	McQUAY	048	1600	0.35"	80/67	46.2	35.3	9.0	90/103	10.6'	60.7	70	70	53.8	40.6	208/1/60	26.3	–	40 A	HORIZONTAL UNIT, RA DUCT COLLAR/FILTER RACK
HP16	McQUAY	060	2000	0.35"	80/67	55.3	42.0	12.0	90/102	11.3'	74.5	70	70	75.7	56.1	208/1/60	39.2	–	60 A	HORIZONTAL UNIT, RA DUCT COLLAR/FILTER RACK
HP17	McQUAY	015	500	0.35"	80/67	14.8	12.0	2.7	90/104	8.8'	19.5	70	70	19.8	14.7	208/1/60	10.3	–	15 A	HORIZONTAL UNIT, RA DUCT COLLAR/FILTER RACK

7-DAY/24-HOUR PROGRAMMABLE NIGHT SET-BACK THERMOSTAT (WITH SPACE TEMPERATURE OVERRIDE AND LOCKING COVER), SUPPLY AIR SMOKE DETECTOR (WIRED BY E.C.).

RT-3,6,7,8,9
TRANE PACKAGED ROOFTOP UNIT MODEL YCD-075-C3-H-A; 75.0 MBH TOTAL COOLING, 53.7 MBH SENSIBLE COOLING @ 80/67 EDB/EWB, 95 F. AMBIENT AND 2,500 CFM; TWO STAGE HIGH HEAT MODEL, 205 MBH NATURAL GAS INPUT, 166 MBH OUTPUT; 2,500 CFM @ 1.00" ESP, 1.0 HP; 36.6 MCA, 50 AMP MFS/MBS 208/3/60. PROVIDE DOWNFLOW ECONOMIZER WITH BAROMETRIC RELIEF, UNIT INSULATION KIT, COIL GUARDS, RAIN HOOD, FIVE YEAR COMPRESSOR WARRANTY, 7-DAY/24-HOUR PROGRAMMABLE NIGHT SET-BACK THERMOSTAT (WITH SPACE TEMPERATURE OVERRIDE AND LOCKING COVER), SUPPLY AIR SMOKE DETECTOR (WIRED BY E.C.).

RT-4,5
TRANE PACKAGED ROOFTOP UNIT MODEL YCD-102-C3-H-A; 107.0 MBH TOTAL COOLING, 75.7 MBH SENSIBLE COOLING @ 80/67 EDB/EWB, 95 F. AMBIENT AND 3,400 CFM; TWO STAGE HIGH HEAT MODEL, 205 MBH NATURAL GAS INPUT, 166 MBH OUTPUT; 3,400 CFM @ 1.00" ESP, 3.0 HP; 53.0 MCA, 60 AMP MFS/MBS 208/3/60. PROVIDE DOWNFLOW ECONOMIZER WITH BAROMETRIC RELIEF, UNIT INSULATION KIT, COIL GUARDS, RAIN HOOD, FIVE YEAR COMPRESSOR WARRANTY, 7-DAY/24-HOUR PROGRAMMABLE NIGHT SET-BACK THERMOSTAT (WITH SPACE TEMPERATURE OVERRIDE AND LOCKING COVER), SUPPLY AIR SMOKE DETECTOR (WIRED BY E.C.).

BB
Q-MARK COMMERCIAL BASEBOARD HEATER MODEL QMKC-2506, 6' LONG, 1500 WATTS, 7.2 AMPS @ 208/1/60. PROVIDE REMOTE SINGLE POLE THERMOSTAT, BUILT-IN DISCONNECT SWITCH, COLOR PER ARCHITECT.

BOILER 1,2
RAYPAK GAS-FIRED BOILER MODEL H3-962-A-B; 962MBH NATURAL GAS INPUT, 788 MBH OUTPUT; 1/4 HP CIRCULATION PUMP; 120/1/60. PROVIDE LOW WATER CUT-OFF, LOW WATER MAKE-UP CONTROL, HIGH LIMIT CONTROL (MANUAL RESET), OPERATING LIMIT CONTROL (AUTOMATIC RESET) AND RELIEF VALVE (PIPE TO FLOOR DRAIN).

PUMPS P1,2
BELL & GOSSETT BASE MOUNTED CENTRIFUGAL PUMP MODEL 1510, 2-1/2" AB, 170 GPM @ 25' HD, 2 HP, 208/3/60.

UNIT HEATERS
Q-MARK ELECTRIC UNIT HEATER MOEDEL MUH-10-8, 10 kW, 650 CFM, 24 VOLT REMOTE THERMOSTAT, BUILT-IN DISCONNECT, 208/3/60.

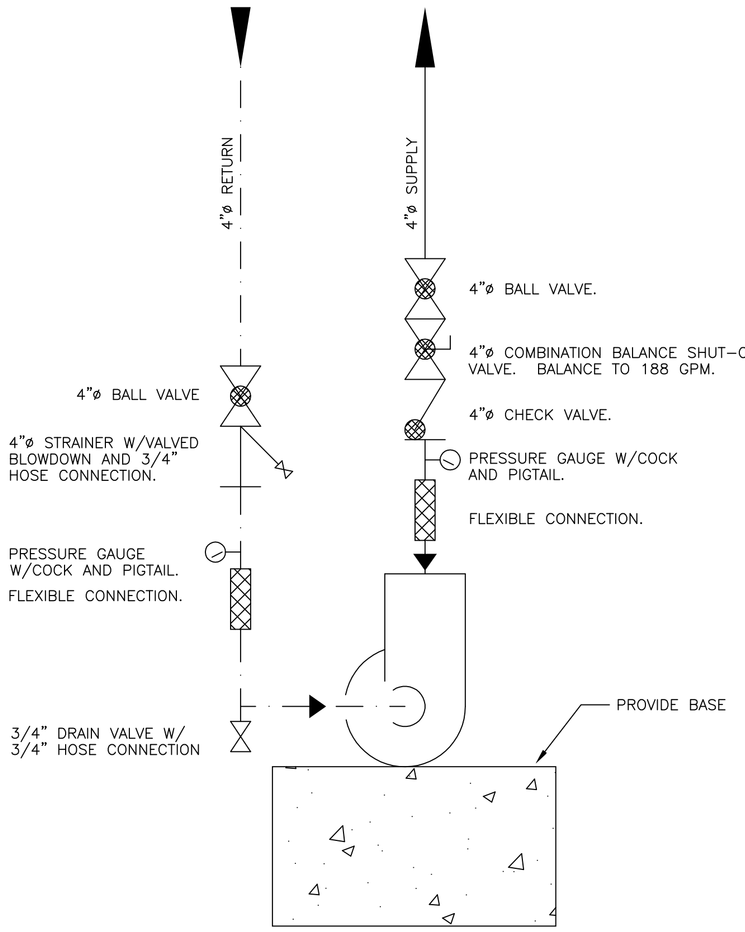

PUMP PIPING DIAGRAM

SCALE: NONE

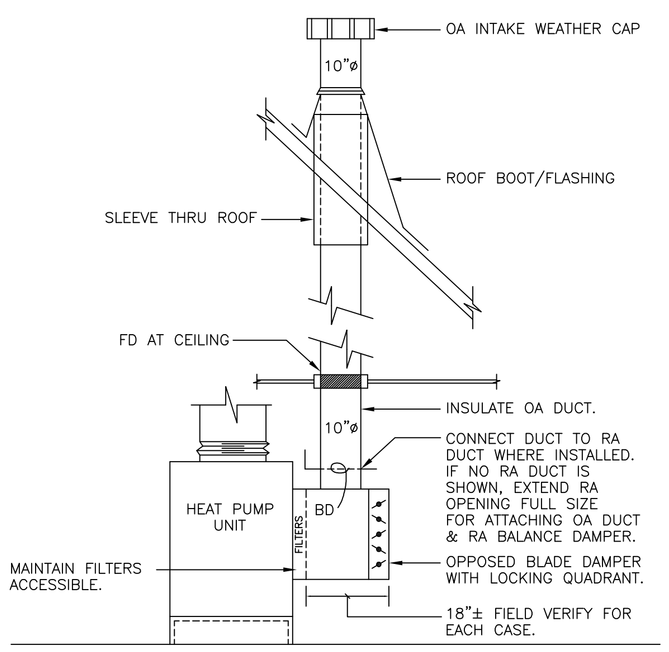

OA DUCTING-HEAT PUMP UNITS

NTS:APPLIES TO HEAT PUMPS HP4(3 TOTAL), HP5, & HP7(2 TOTAL)

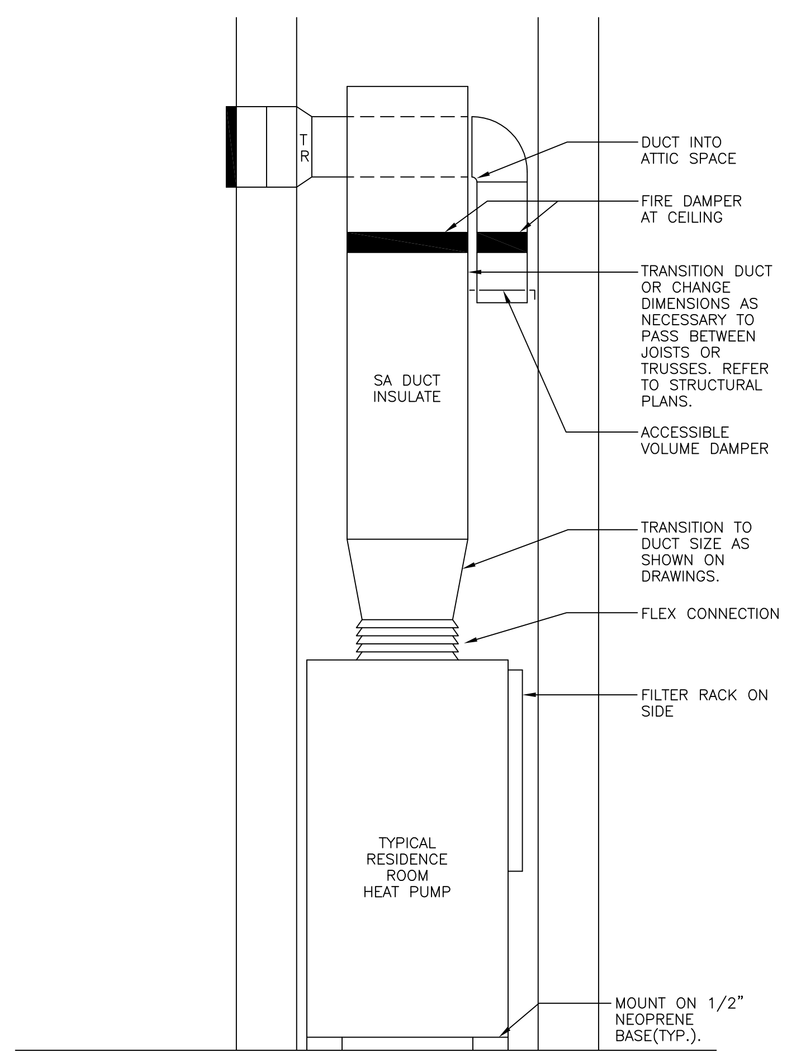

HEAT PUMP ELEVATION

SCALE: NONE
TYPICAL FOR RESIDENCE ROOMS

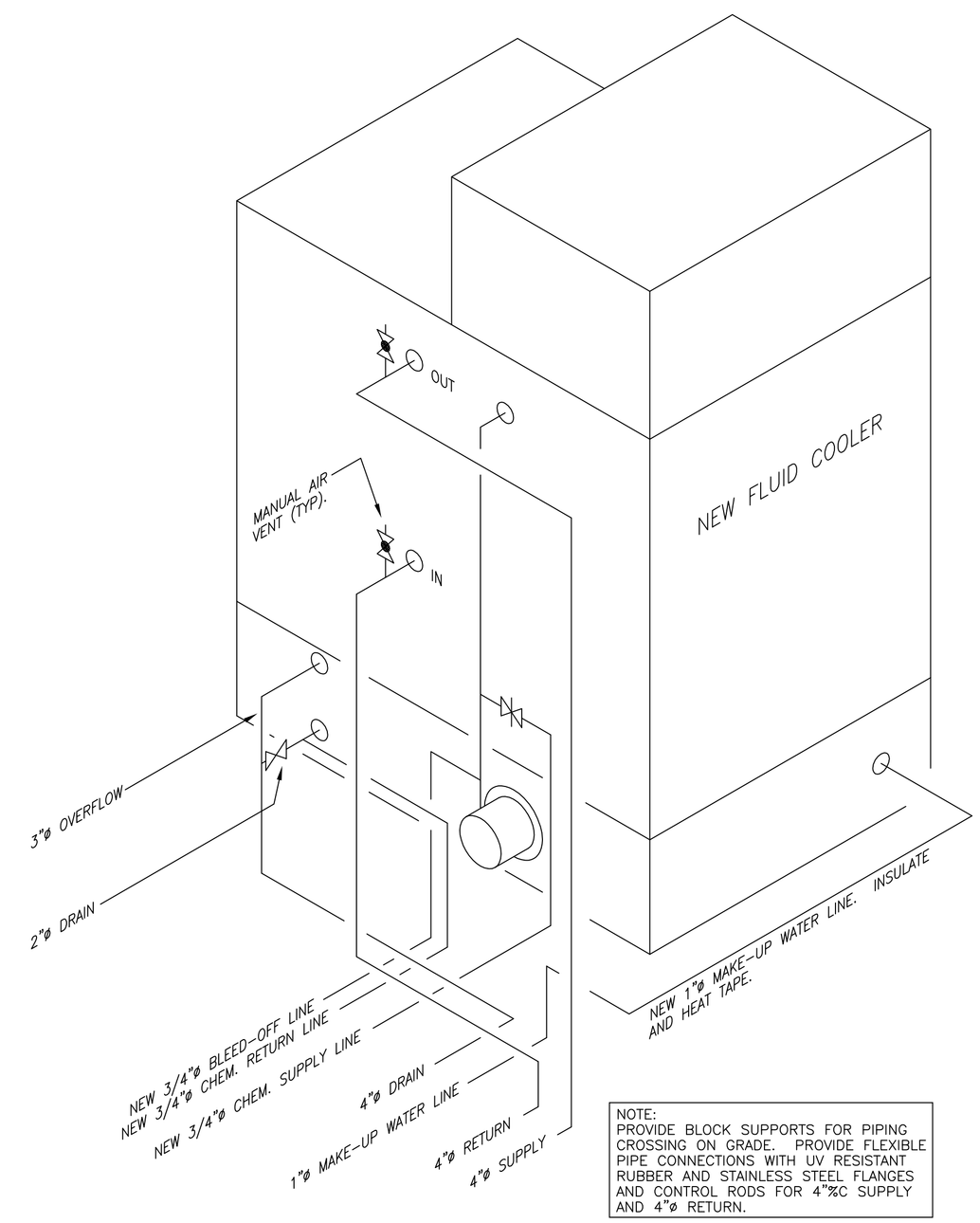

NOTE:
PROVIDE BLOCK SUPPORTS FOR PIPING CROSSING ON GRADE. PROVIDE FLEXIBLE PIPE CONNECTIONS WITH UV RESISTANT RUBBER AND STAINLESS STEEL FLANGES AND CONTROL RODS FOR 4"%C SUPPLY AND 4"ø RETURN.

FLUID COOLER PIPING DIAGRAM

SCALE: NONE

A HVAC ROOF PLAN

SCALE: 1" = 16'-0"